# *Ductless fume hoods* CLASSIC RANGE

## Classic Range models **670, 870, 990, 1010, 1200, 1200XL** & **ECO²**




## NEW FEATURES

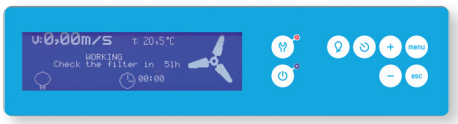

**More information on the new LCD display**

- √ New size 127x34mm display
- √ Continuously monitored air speed
- √ Type of filter installed, working hours, expiration date and next revision date
- √ Open door warning through electronic photocell
- √ Countdown timer
- √ Clock and calendar

**New features and components**

- √ Startup airflow adequacy cycle and switch off final purge cycle
- √ Fault LED
- √ Control of air flow via Microprocessor
- √ HEPA filters with electronic chip
- √ LED illumination

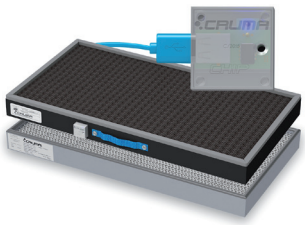

**New alarms and scheduled warnings**

- √ Open door warning
- √ Open door in off mode warning
- √ 60h of filter use warning
- √ Next validation warning
- √ Few hours of filter life warning
- √ Countdown timer warning
- √ Expired filter alarm (by hours)
- √ Expired filter alarm (by date)
- √ Temperature alarm
- √ Equipment without filter alarm
- √ Low barrier alarm

## USES

General chemistry involving small volumes of reagents or chemical compounds at ambient/moderate temperature in all types of laboratories:

- √ Research laboratories
- √ Quality control laboratories
- √ Clinical and hospital laboratories
- √ University and school laboratories

...In general, in any kind of laboratory.

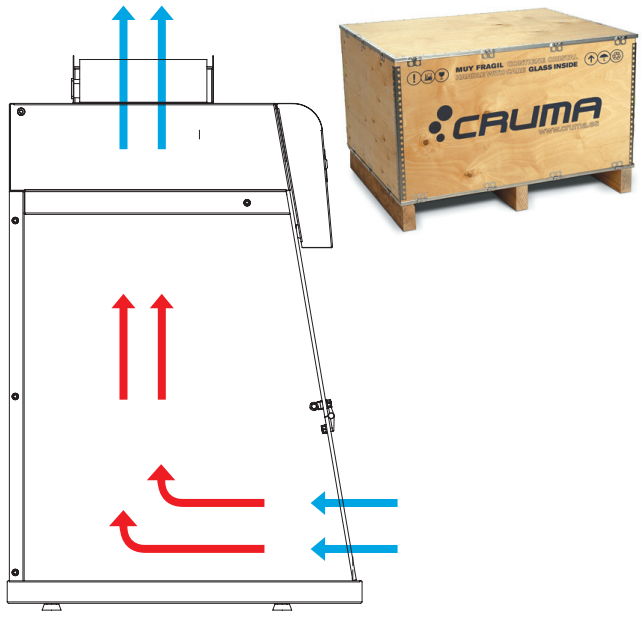

The main feature of **this range** is that **it comes unassembled**, and therefore can be placed in any laboratory without any problem (narrow or difficult access).

The fume hoods of the **Classic range** are **Class II** according to **Standard NF X 15-211** and are equipped with a simple filter (for molecular adsorption of vapors / gases) or a double filter (for the retention of vapors / gas and smoke / particles).



Movilair



Tubular

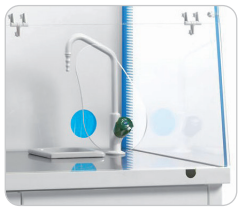

Water Pack

## SERIAL EQUIPMENT

| | |
|---|---|
| **Electronic circuit with large-format LCD screen** | Security levels: level 1 users and level 2 advance (for maintenance) |
| **Digital anemometer** | Electronic probe for continuous monitoring of air face velocity |
| **Door open photocell** | Electronic device with door open alarm |
| **Electronic control device for filters replacement** | The filters incorporate a microchip with miniUSB connection that identifies the type of filter, expiration date and serial no. |
| **Lighting** | High intensity, low consumption LED tube - 15 W / 1500 lm |
| **Probe for sampling expelled air** | Detection system for filter media saturation level |
| **60 hours alarm** | Countdown timer according French standard NF X 15-211 |
| **Digital timer with audible alarm** | For monitoring and alerting work performed in the cabinet or laboratory |
| **Clock and calendar** | Date and time display |
| **Working surface 1** | Spill retention tray (2-10 liters) with working surface in white tempered glass |
| **G4 Prefilter** | Prefilter blanket of synthetic biofibers class G4 for atmospheric dust retention |
| **Cable entry holes (2)** | Rear wall acces for cable and/or service entry |
| **Chemical Listing** | Guide of retained product according to filter type |
| **Warranty** | 10 years |

## OPTIONAL EQUIPMENT

| | |
|---|---|
| **Movilair** | Stand with wheels and inner tray made of steel coated with anti-corrosive epoxy resin |
| **Tubular support** | Stand made of steel coated with anti-corrosive epoxy resin |
| **Water Pack** | Spill retention tray (2-10 liters) with working surface in stainless steel. 304. Includes a complete sink with water tap. |
| **Working surface 2** | Spill retention tray (2-10 liters) with working surface in stainless steel 316 |
| **Working surface 3** | Spill retention tray (2-10 liters) with working surface in polypropilene (PP) |
| **Vision rear panel** | Rear wall made of 1.2 mm thick galvanized steel with a 4 mm thick transparent methyl methacrylate (PMMA) window |
| **Power supply** | On request available for 110 V / 127 V. |
| **Filter test kit** | Dräger pump with reactive colorimetric tubes (pack 10u) |

## MAIN STRUCTURE

| | |
|---|---|
| **Metal parts:** base frame, rear wall and head | Made of 1.2 mm galvanized steel coated with anti-corrosive thermoplastic resin hardened at 200 °C. |
| **Side panels and doors** | Made of transparent methyl methacrylate (PPMA) 6 mm thick for the door and 8 mm thick for the sides. Light transmission of 93%. |

## MODULAR FILTRATION COLUMN FOR GASES AND PARTICLES (according to NFX 15-211:2009)

### CLASS 2

| | |
|---|---|
| **Type G**<br>Handling of liquid compounds/products |  |
| **Type GS**<br>Handling of liquid and particles compounds/products |  |

 Fan  Molecular Filter  HEPA-H14 Filter

## TYPES OF FILTERS

| | |
|---|---|
| **Type A** | Suitable for **organic vapours** such as ketones, ethers, alcohols, aromatic compounds, etc. Eventually. it may be used with inorganic acids, but only if used in small quantities, because this activated carbon is not impregnated and an excess of acid vapours would quickly saturate it. |
| **Type BE** | For **inorganic acid** vapours such as H2S04, HCl, HN03 and **volatile sulphur** compounds such as H2S, S03, etc. It is also recommended for filtering organic and inorganic compounds when they are produced in similar proportions, as activated carbon incorporates impregnations of metallic compounds and neutralising salts. |
| **Type F** | For **formaldehyde**, **formol fumes and their derivatives**, as well as for other organic compound.s Activated carbon is impregnated with oxidant agents. |
| **Type K** | Suitable for **ammonical vapours (NH3) and amines**, as well as for other organic componds. In this case, the carbon is imprenated with oxoacids. |
| **Type ABEK** | Mixed type to be used when the proportions between **organic**, **inorganic** and **NH3 / amines vapours** are similar. |
| **Type D** | **HEPA Filter** (High Efficiency Particulate Air) **H-14** (according to EN-29463-2) for filtering **particles of dust and fumes.** |

DUCTLESS FUME HOOD. CLASSIC RANGE

# CRUMA 670

**Perfect for small working spaces.** This ductless fume hood is recommended to remove from the working area gaseous polluting agents and/or solid particles/aerosols in a simple, efficient and cost effective way, protecting both the user and the environment. **CRUMA 670** ductless fume hood uses the CRUMA filtration system.

Cruma ductless fume hoods designed to handle low toxic products are made of steel plate with antiacid polymerized epoxy coating and methylpropilene of high resistance.




## TECHNICAL FEATURES

| | | |
|---|---|---|
| Number of filtration columns | | 1 |
| Number of filters | | 1 to 2 |
| Number of IP44 fans | | 1 |
| Average volume of treated air | | 109 $m^3/h$ |
| Average face velocity | | 0,50 m/s |
| Internal volume of the cabinet | | 0,202 $m^3$ |
| Renewals inside the cabinet / min | | 9,0 |
| Total electrical power consumption | | 57 W |
| Power supply [1] | | 220-240 V / 50-60 Hz |
| LED light level | | 1300 lx |
| Noise level | | 55 ± 3 dB |
| **Packaging:** 100% recycled wooden box with international phytosanitary certificate | Volume | 0,33 $m^3$ |
| | Weight | 58 Kg |

[1] On request available for 110 V / 127 V.

## SIZES (MM)

| External | | | Internal | | |
|---|---|---|---|---|---|
| Width | Depth | Height | Width | Depth | Height |
| **600** | **600** | **937** | **576** | **563** | **620** |

Filters with microchip and USB connection,
*intelligent filtering*

Information storage and interaction with the alarm system.




## SIZES (mm)

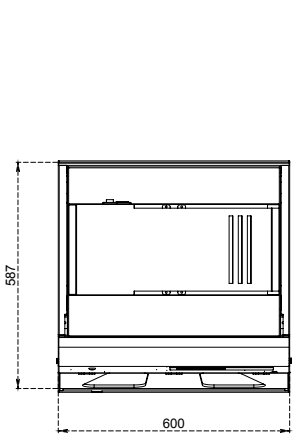


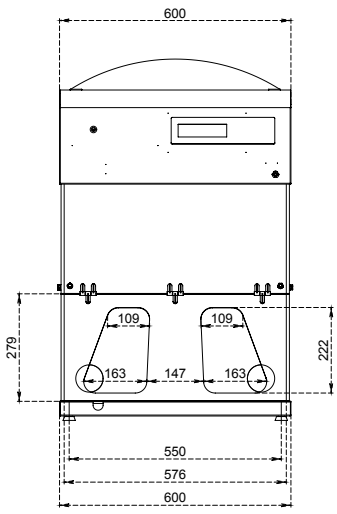


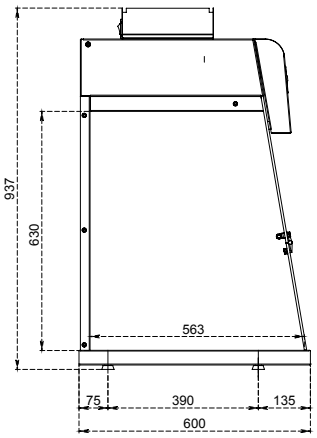

DUCTLESS FUME HOOD. CLASSIC RANGE

# CRUMA870

This model is perfect to be joined to another hood of similar measures or to a CRUMA 990. Ideal to remove from the working area gaseous polluting agents and/or solid particles/aerosols in a simple, efficient and cost effective way, protecting both the user and the environment. **CRUMA 870** ductless fume hood uses the CRUMA filtration system.

Cruma ductless fume hoods designed to handle low toxic products are made of steel plate with antiacid polymerized epoxy coating and methylpropilene of high resistance.




## TECHNICAL FEATURES

| | | |
|---|---|---|
| Number of filtration columns | | 1 |
| Number of filters | | 1 to 2 |
| Number of IP44 fans | | 1 |
| Average volume of treated air | | 164 $m^3/h$ |
| Average face velocity | | 0,50 m/s |
| Internal volume of the cabinet | | 0,316 $m^3$ |
| Renewals inside the cabinet / min | | 8,6 |
| Total electrical power consumption | | 57 W |
| Power supply [1] | | 220-240 V / 50-60 Hz |
| LED light level | | 1100 lx |
| Noise level | | 55 ± 3 dB |
| **Packaging:** 100% recycled wooden box with international phytosanitary certificate | Volume | 0,42 $m^3$ |
| | Weight | 77 Kg |

[1] On request available for 110 V / 127 V.

## SIZES (MM)

| External | | | Internal | | |
|---|---|---|---|---|---|
| Width | Depth | Height | Width | Depth | Height |
| 800 | 600 | 1037 | 776 | 563 | 720 |




Contact your distributor or call us if you have any questions or need technical support, spare parts, maintenance service... **+34 93 370 61 62**

## SIZES (mm)

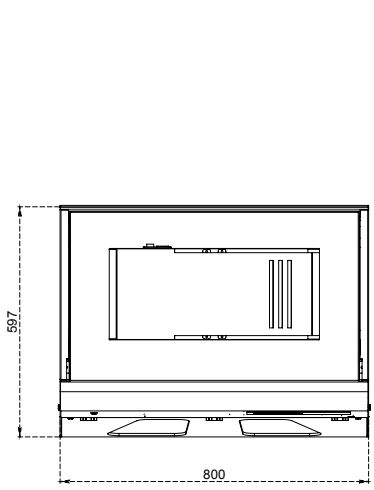


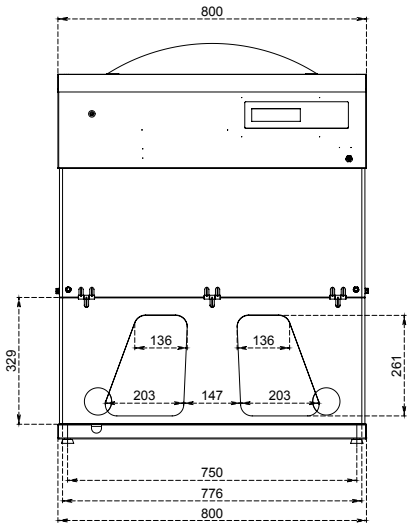


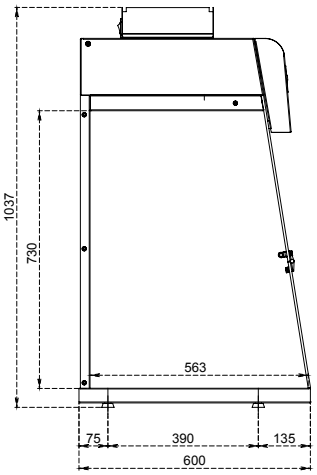

DUCTLESS FUME HOOD. CLASSIC RANGE

# CRUMA 990

To remove from a large working area gaseous polluting agents and/or solid particles/ aerosols in a simple, efficient and cost effective way, protecting both the user and the environment. **CRUMA 990** ductless fume hood uses the CRUMA filtration system.

Cruma ductless fume hoods designed to handle low toxic products are made of steel plate with antiacid polymerized epoxy coating and methylpropilene of high resistance.

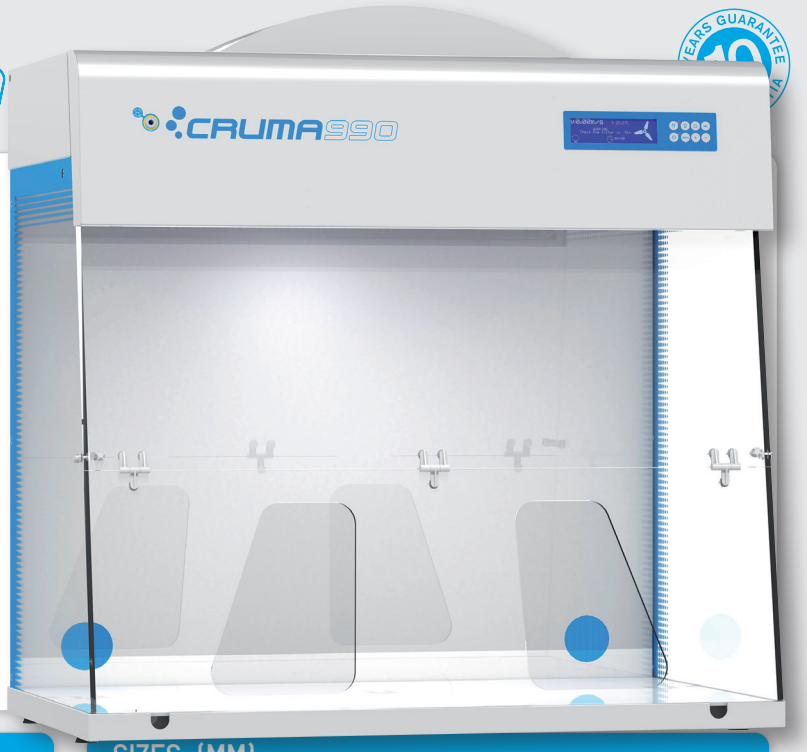


## TECHNICAL FEATURES

| | | |
|---|---|---|
| Number of filtration columns | | 1 |
| Number of filters | | 1 to 2 |
| Number of IP44 fans | | 1 |
| Average volume of treated air | | 164 $m^3/h$ |
| Average face velocity | | 0,50 m/s |
| Internal volume of the cabinet | | 0,398 $m^3$ |
| Renewals inside the cabinet / min | | 6,9 |
| Total electrical power consumption | | 60 W |
| Power supply [1] | | 220-240 V / 50-60 Hz |
| LED light level | | 1100 lx |
| Noise level | | 57 ± 3 dB |
| **Packaging:** 100% recycled wooden box with international phytosanitary certificate | Volume | 0,52 $m^3$ |
| | Weight | 90 Kg |

## SIZES (MM)

| External | | | Internal | | |
|---|---|---|---|---|---|
| Width | Depth | Height | Width | Depth | Height |
| 1000 | 600 | 1037 | 976 | 563 | 720 |

Filters with microchip and USB connection,
*intelligent filtering*

Information storage and interaction with the alarm system.




[1] On request available for 110 V / 127 V.

## SIZES (mm)

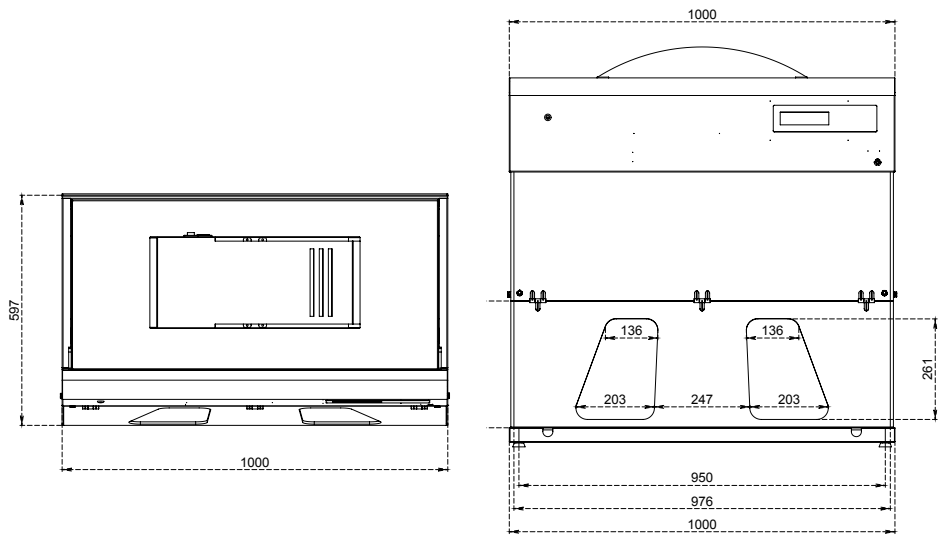

DUCTLESS FUME HOOD. CLASSIC RANGE

# CRUMA 1010




Perfect for applications that require a **high working space**. This model is ideal to remove gaseous polluting agents and/or solid particles/ aerosols from the working space in a simple, efficient and cost effective way, protecting both the user and the environment. **CRUMA 1010** ductless fume hood uses the CRUMA filtration system.

Cruma ductless fume hoods designed to handle low toxic products are made of steel plate with antiacid polymerized epoxy coating and methylpropilene of high resistance.

## TECHNICAL FEATURES

| | | |
|---|---|---|
| Number of filtration columns | | 1 |
| Number of filters | | 1 to 2 |
| Number of IP44 fans | | 1 |
| Average volume of treated air | | 164 $m^3/h$ |
| Average face velocity | | 0,50 m/s |
| Internal volume of the cabinet | | 0,508 $m^3$ |
| Renewals inside the cabinet / min | | 5,4 |
| Total electrical power consumption | | 60 W |
| Power supply [1] | | 220-240 V / 50-60 Hz |
| LED light level | | 825 lx |
| Noise level | | 57 ± 3 dB |
| **Packaging:** 100% recycled wooden box with international phytosanitary certificate | Volume | 0,52 $m^3$ |
| | Weight | 95 Kg |

[1] On request available for 110 V / 127 V.

## SIZES (mm)

| External | | | Internal | | |
|---|---|---|---|---|---|
| Width | Depth | Height | Width | Depth | Height |
| 1000 | 600 | 1237 | 976 | 563 | 920 |




Contact your distributor or call us if you have any questions or need technical support, spare parts, maintenance service... **+34 93 370 61 62**

## SIZES (mm)

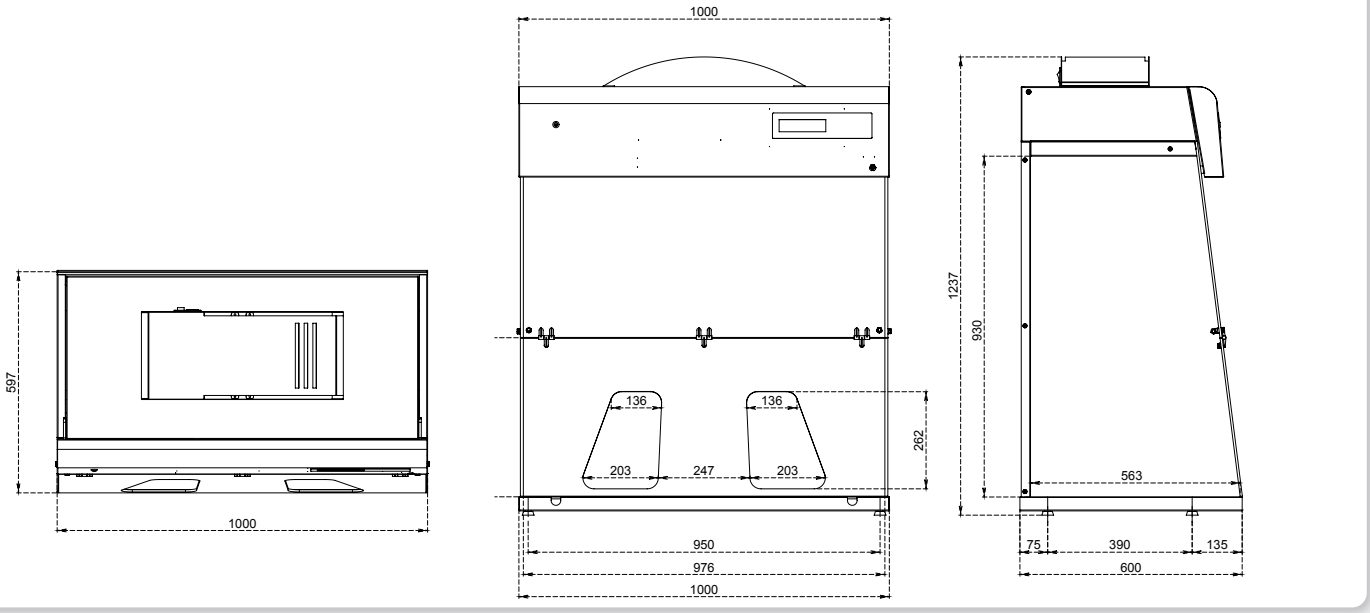

DUCTLESS FUME HOOD. CLASSIC RANGE

# CRUMA 1200

Cruma ductless fume hood with the **largest working surface**. Perfect to remove gaseous polluting agents and/or solid particles/aerosols from the working space in a simple, efficient and cost effective way, protecting both the user and the environment.

**CRUMA 1200** ductless fume hood uses the CRUMA filtration system, without any exterior connection.




## TECHNICAL FEATURES

| | | |
|---|---|---|
| Number of filtration columns | | 1 |
| Number of filters | | 1 to 2 |
| Number of IP44 fans | | 1 |
| Average volume of treated air | | 164 $m^3/h$ |
| Average face velocity | | 0,50 m/s |
| Internal volume of the cabinet | | 0,697 $m^3$ |
| Renewals inside the cabinet / min | | 3,9 |
| Total electrical power consumption | | 60 W |
| Power supply [1] | | 220-240 V / 50-60 Hz |
| LED light level | | 800 lx |
| Noise level | | 57 ± 3 dB |
| **Packaging:** 100% recycled wooden box with international phytosanitary certificate | Volume | 0,64 $m^3$ |
| | Weight | 118 Kg |

[1] On request available for 110 V / 127 V.

## SIZES (mm)

| External | | | Internal | | |
|---|---|---|---|---|---|
| Width | Depth | Height | Width | Depth | Height |
| 1200 | 800 | 1097 | 1176 | 760 | 780 |

Filters with microchip and USB connection,
*intelligent filtering*

Information storage and interaction with the alarm system.




## SIZES (mm)

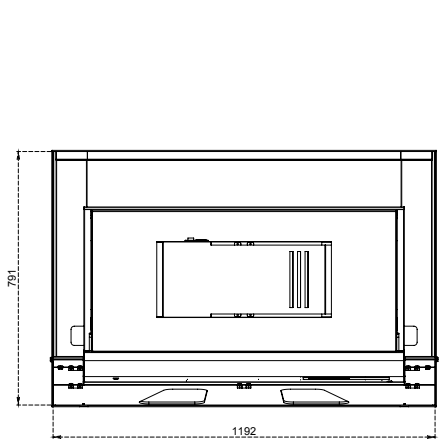


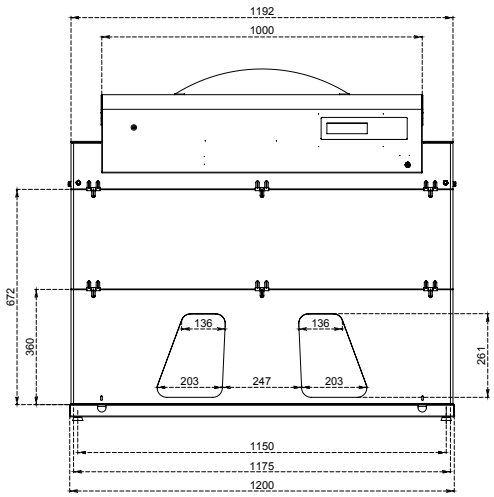


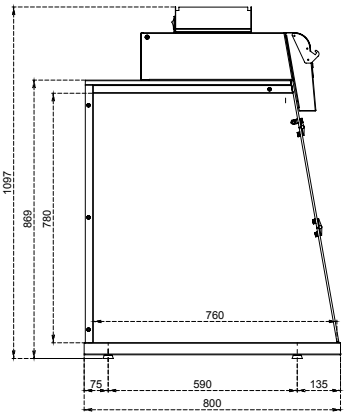

DUCTLESS FUME HOOD. CLASSIC RANGE

# 1200XL

The ductless fume hood Cruma 1200XL is our Classic Range cabinet with the largest interior volume and working height. Specially designed to work with high instruments. Perfect to remove gaseous polluting agents and/or solid particles/ aerosols from the working space in a simple, effi cient and cost effective way, protecting both the user and the environment. CRUMA 1200XL ductless fume hood uses the CRUMA filtration system, without any exterior connection




## TECHNICAL FEATURES

| | | |
|---|---|---|
| Number of filtration columns | | 1 |
| Number of filters | | 1 to 2 |
| Number of IP44 fans | | 1 |
| Average volume of treated air | | 164 $m^3/h$ |
| Average face velocity | | 0,50 m/s |
| Internal volume of the cabinet | | 1,258 $m^3$ |
| Renewals inside the cabinet / min | | 2,2 |
| Total electrical power consumption | | 60 W |
| Power supply [1] | | 220-240 V / 50-60 Hz |
| LED light level | | 800 lx |
| Noise level | | 57 ± 3 dB |
| **Packaging:** 100% recycled wooden box with international phytosanitary certificate | Volume | 0,65 $m^3$ |
| | Weight | 123 Kg |

[1] On request available for 110 V / 127 V.

| External | | | Internal | | |
|---|---|---|---|---|---|
| Width | Depth | Height | Width | Depth | Height |
| 1200 | 1000 | 1422 | 1176 | 967 | 1106 |

Filters with microchip and USB connection,
*intelligent filtering*

Information storage and interaction with the alarm system.




## SIZES (mm)

